Slow, Easy and Quiet

Specially designed to make a positive contribution to the consumer's life, SAMET Lift Up Door Systems is innovative, elegant and convenient, as well as powerful and durable.

In each cell you will feel the quality standards, innovative structure and design power of Samet.

- D-Lite Lift Single Lift-Up Door Mechanism

d-lite **lift**

Hingeless Single Lift-Up Door Mechanism

d-lite **lift**

- Gradually opening
- Soft closing mechanism which ensures silent and gentle closure
- Post-assembly door adjustment
- Can be adjusted according to the weight of the door
- Two different opening angle options
- For doors 200-600 mm in height
- For doors up to 1200 mm in width
- 1-14.7 kg loading capacity

D-Lite Lift Boutique Package

CODE	DESCRIPTION	POWER	COLOR
12407810001017	D-Lite Hingeless Lift Up H-600MM	C1	White
12407810003017	D-Lite Hingeless Lift Up H-600MM	C1	Grey
12407810006017	D-Lite Hingeless Lift Up H-600MM	C1	Mocha
12407810007017	D-Lite Hingeless Lift Up H-600MM	C1	Anthracite

Technical Dimensions

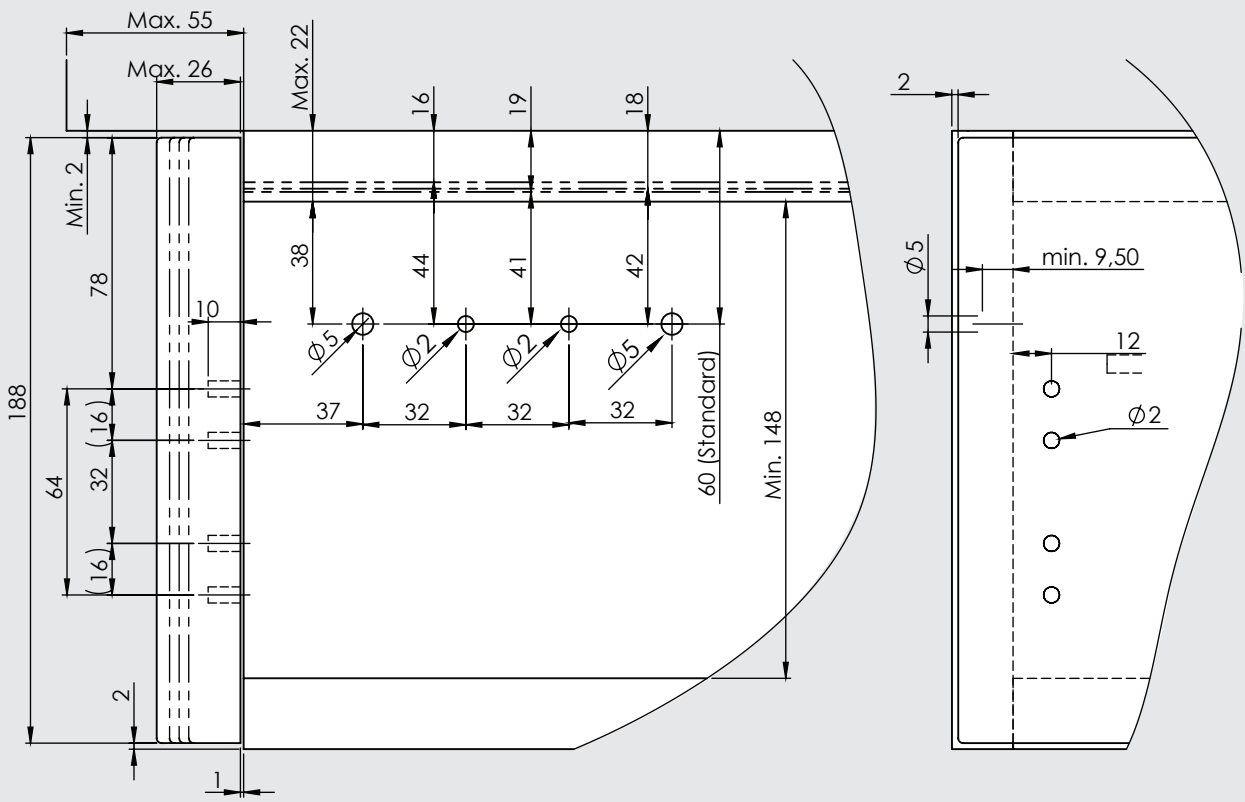

Parts

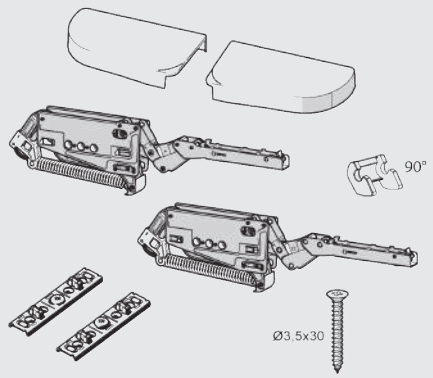

Product Selection Table

DOOR HEIGHT / POWER UNIT	C1	
	min. kg	max. kg
200 mm	7	14,7
201-250 mm	5,5	12,2
251-300 mm	4,5	9,9
301-350 mm	4	7,9
351-400 mm	3,6	7,2
401-450 mm	3,2	6,3
451-500 mm	2,8	5,5
501-550 mm	2,6	5,1
551-600 mm	2,5	4,6

More powerful mechanism is recommended for intersection areas.

d-lite **lift**

Hingeless Single Lift-Up Door Mechanism

Assembly

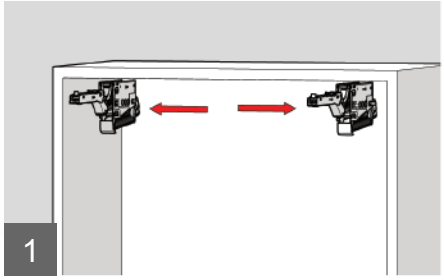

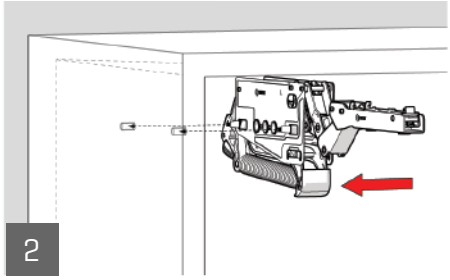

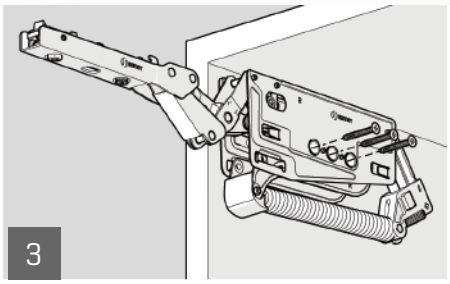

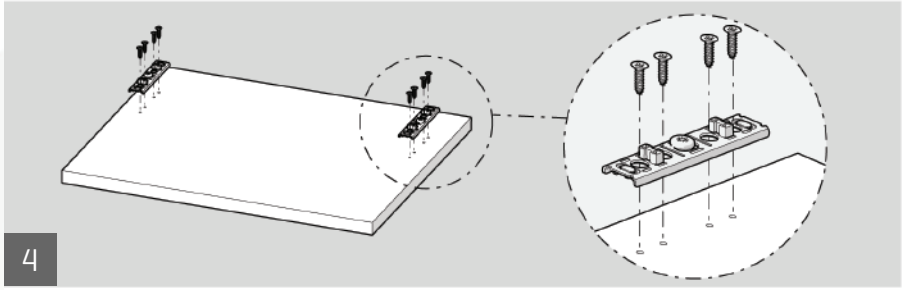

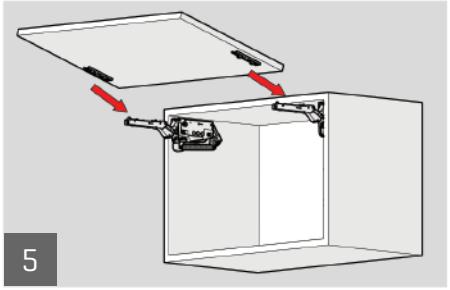

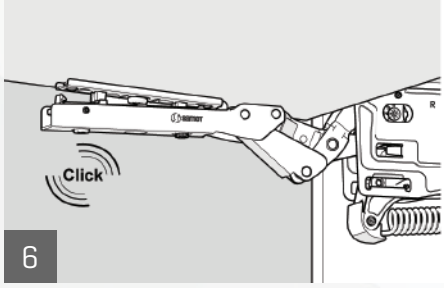

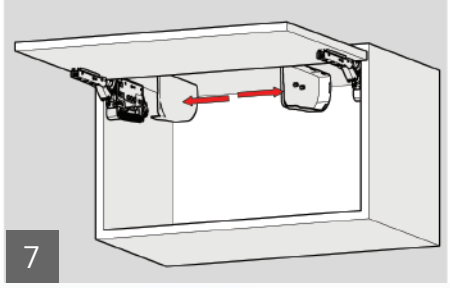

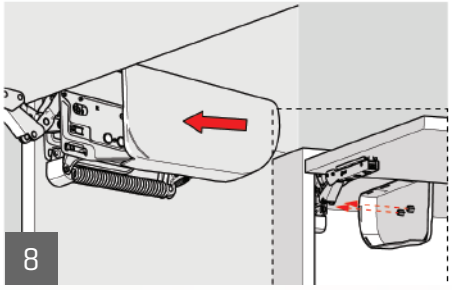

90° Opening Angle

1

The stoper is used to limit the opening angle of 90°.

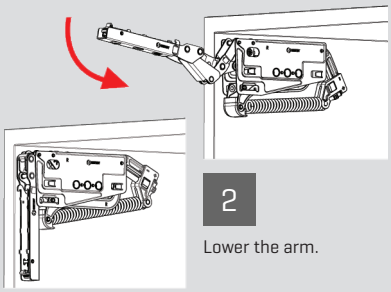

2

Lower the arm.

3

Remove the existing stopper.

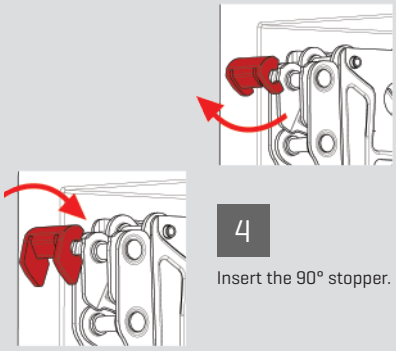

4

Insert the 90° stopper.

Adjustment

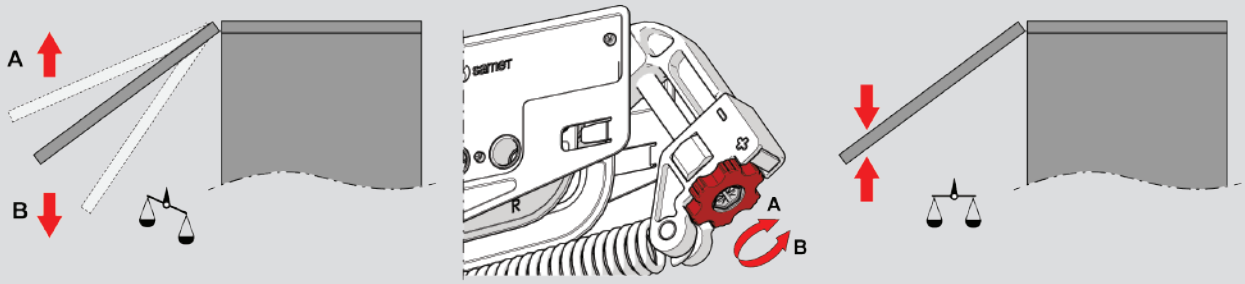

If, when the door is released, it rises instead of remaining in position, turn in direction "A," and if it descends, turn in direction "B" in order to adjust balance.

Low braking at setting 1, High braking at setting 4.

If the door closes too fast or too slowly, you can adjust the strength of the soft closing mechanism by adjusting from the specified position.

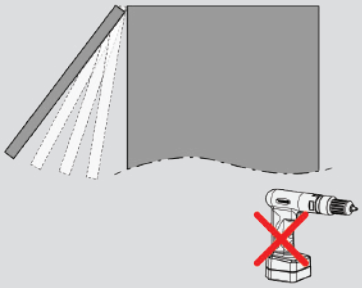

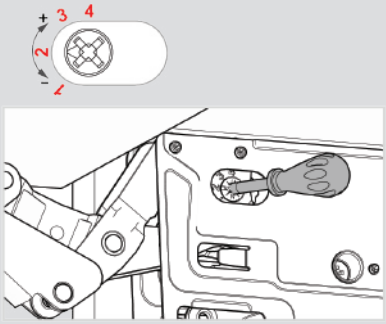

Important: Do not force the adjustment mechanism beyond the end point.

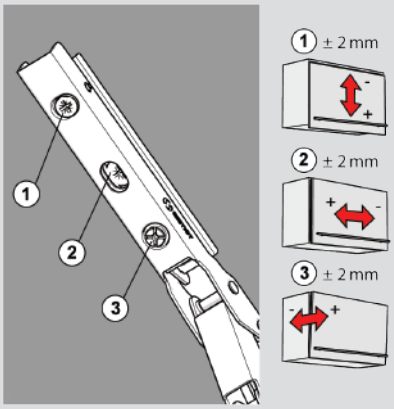

MultiLift

Double Lift-Up Door Mechanism

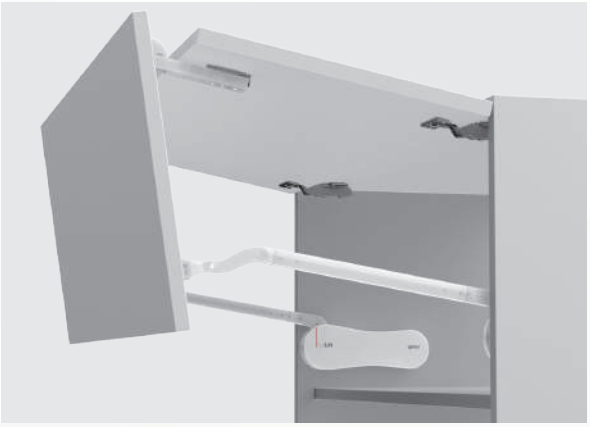

MultiLift

- Improved mechanical design
- Gradually opening
- Soft closing specification guarantees silently and smoothly working
- Easy adjustment after mounting
- Adjustable according to cabinet door weight
- Opening angle adjustment
- Adaptable 5 different force option after mounting the body
- Cabinet heights from 540 mm to 900 mm
- 1200 mm cabinet door width
- 3 kg - 21 kg loading capacity

Multy Lift Power **Grey**

DESCRIPTION	D1 Power Unit	E1 Power Unit
720mm	1240644317	1240654317
800 mm	1240645317	1240655317
860 mm	1240646317	1240656317

DDLift Mounting Dimensions

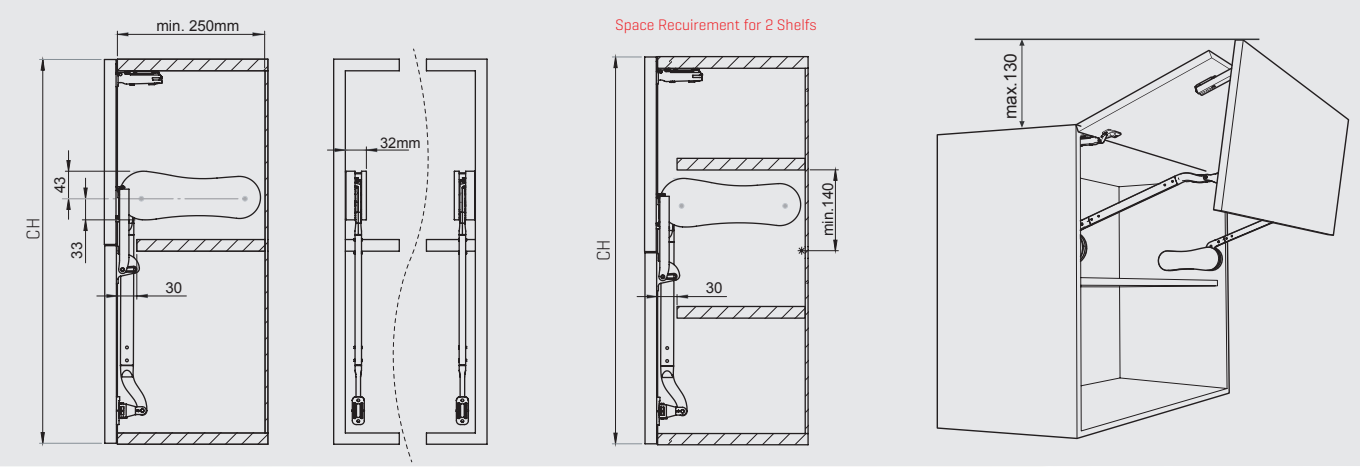

Recommended Screw	Ø3,5x16mm

Technical Dimensions

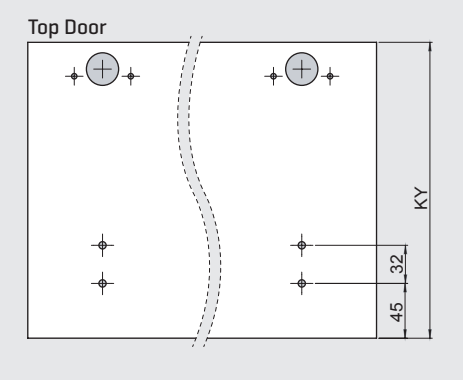

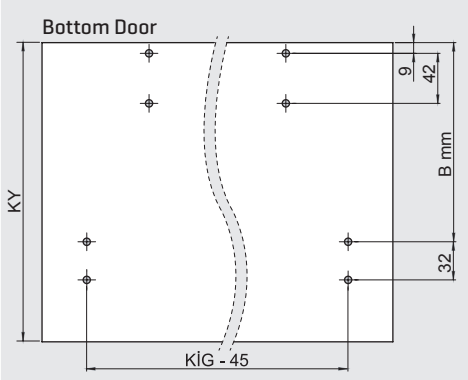

CH (mm)	B mm
720 (700-780)	269
800 (780-840)	309
865 (840-900)	339

Assembly Hole Centers

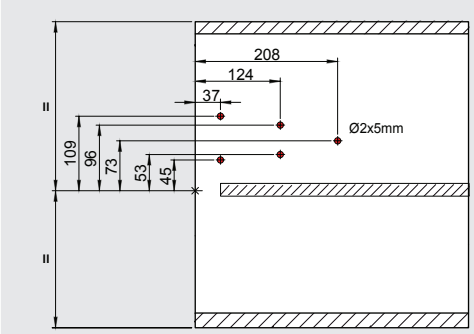

Cabinet Internal Width : **CIW**
Door Width : **DW**
Door Heigth : **DH**
Cabinet Heigth : **CH**

Guide Hole Centers

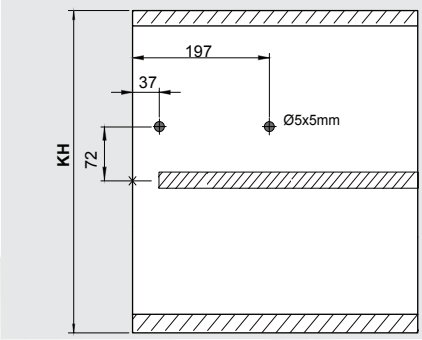

Parts

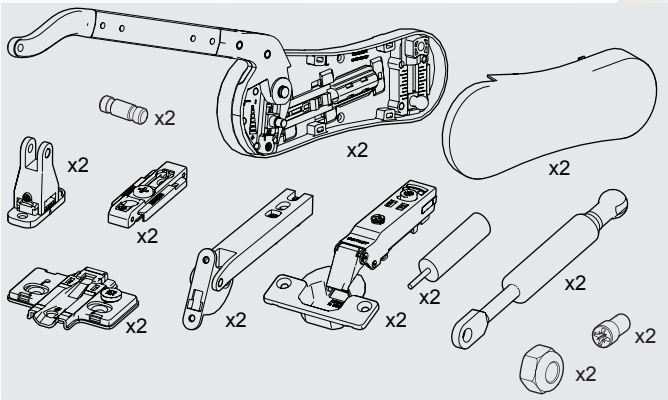

Product Selection Table

DOOR HEIGHT \ POWER UNIT	D1 1249905		E1 1249917	
	min. kg	max. kg	min. kg	max. kg
550 (540-580) mm	9,5	14	13	21
600 (580-640) mm	8,5	13	13	18,5
650 (640-700) mm	7,5	11	11	15,5
720 (700-780) mm	6,5	9,5	9,5	14
800 (780-840) mm	5	7,5	7,5	12
865 (840-900) mm	5	6,5	6,5	10

More powerful mechanism is recommended for intersection areas.

MultiLift

Double Lift-Up Door Mechanism

Assembly

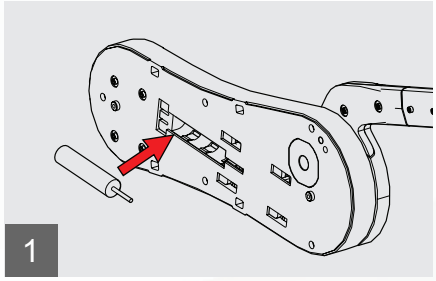

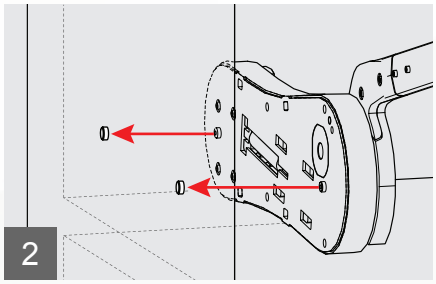

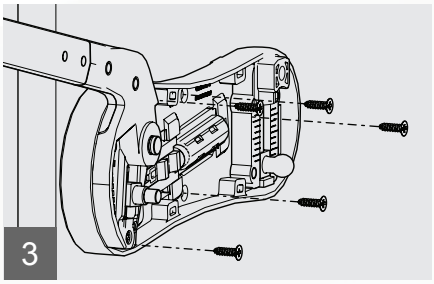

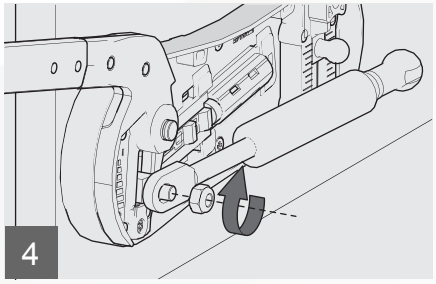

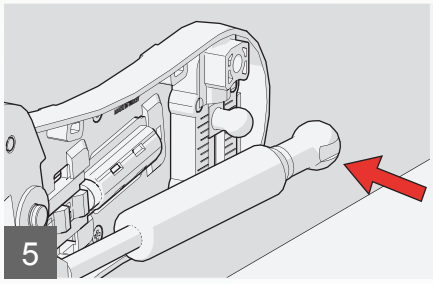

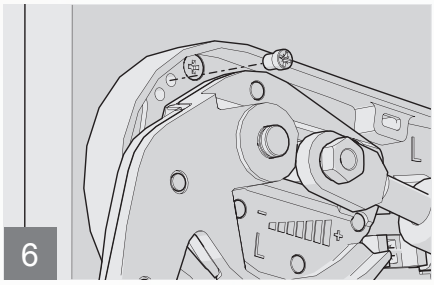

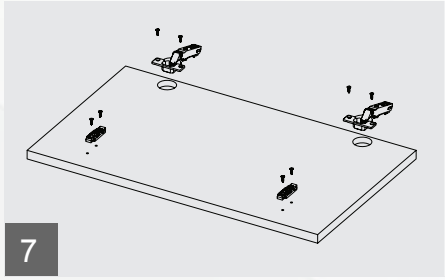

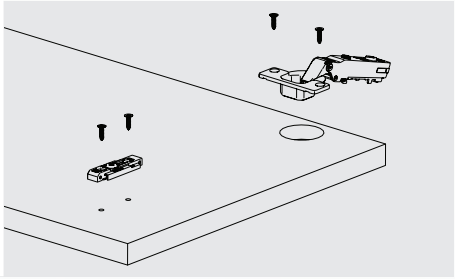

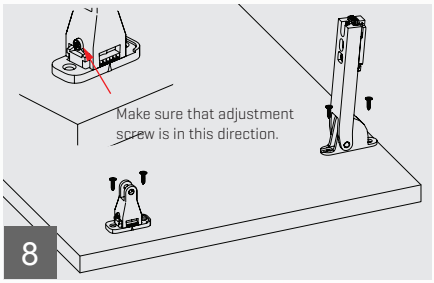

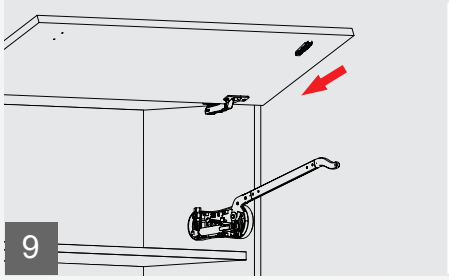

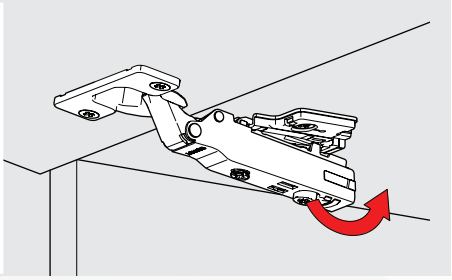

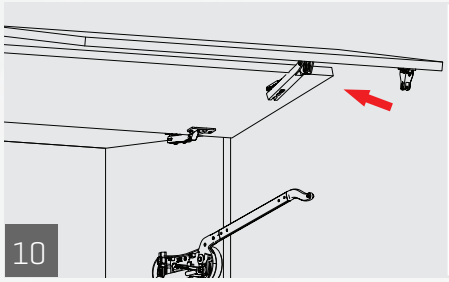

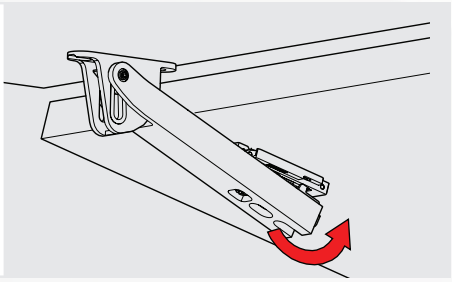

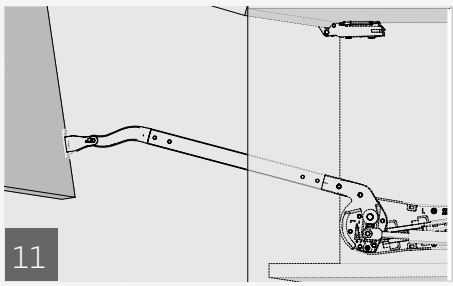

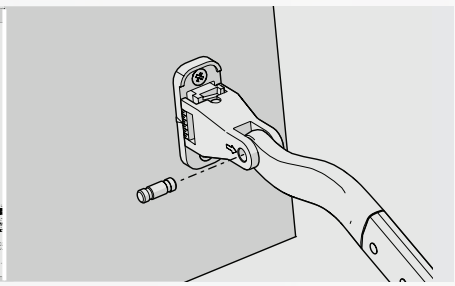

Adjustment

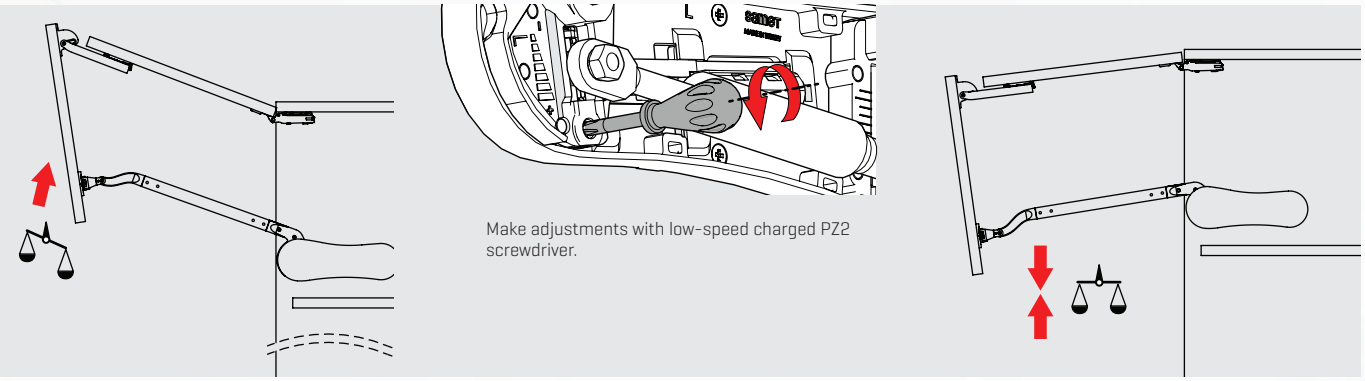

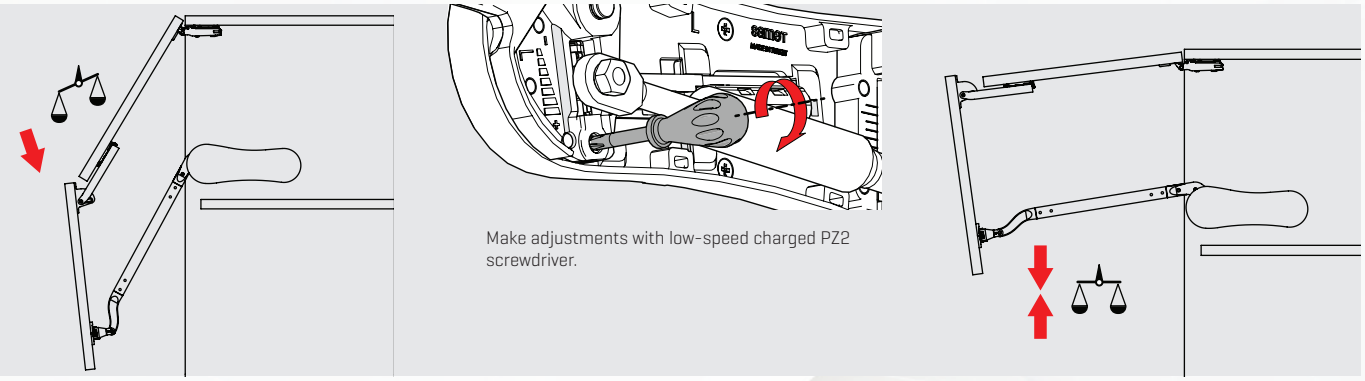

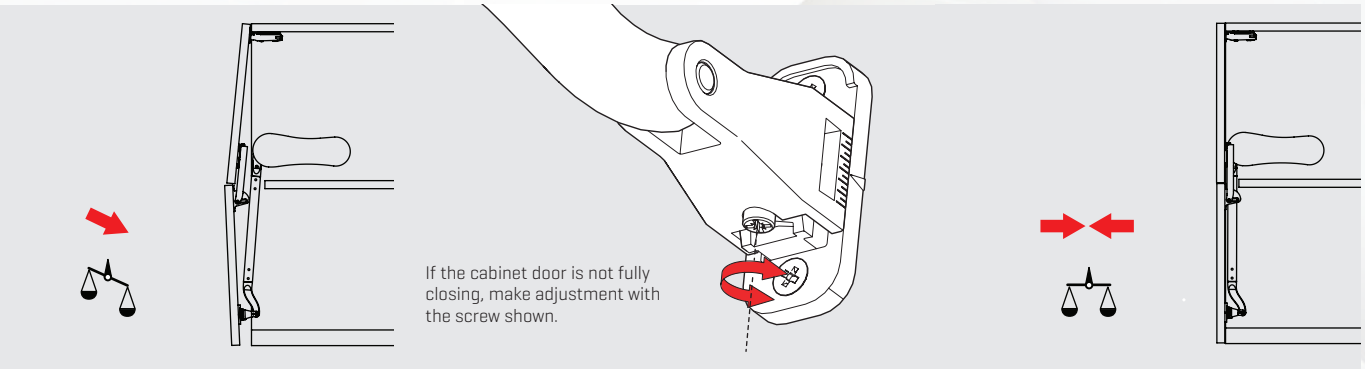

If the cabinet door is closing fast or slow, you can adjust power of the brake mechanism from the point shown below.

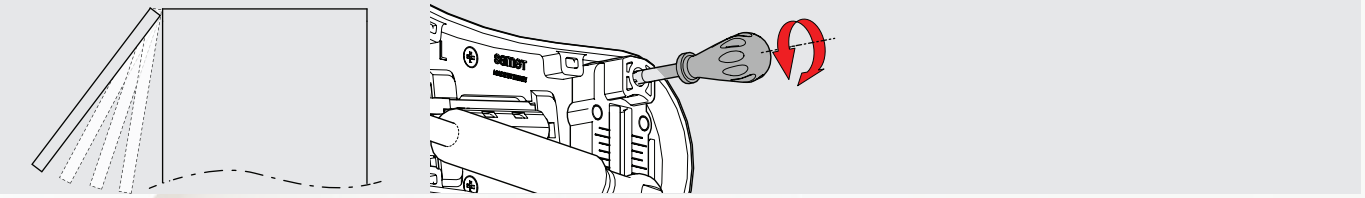

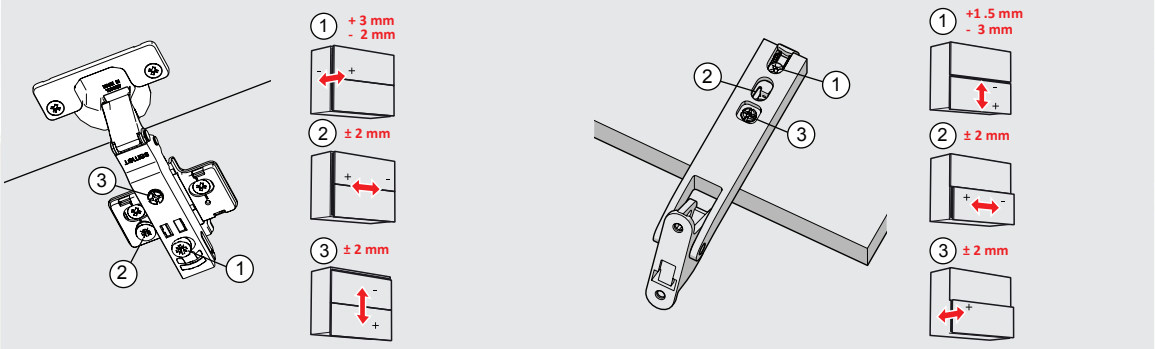

Gas Spring Aluminium

Code Table

DESCRIPTION	CODE
Gas Spring 80 Newton Aluminium	1240287
Gas Spring 100 Newton Aluminium	1240288
Gas Spring120 Newton Aluminium	1240289

Note

dorsët | POWERED BY samet

Dorset Industries Pvt. Ltd.

Corporate Office:
AIHP Horizon, 445, 1st Floor, Udyog Vihar Phase - V, Sector - 19, Gurugram, Haryana, 122008,
Phones: + 91-124-4567890, E-mail: response@dorsetindia.com
Website : www.dorsetindia.com

Branch Offices:
Bengaluru | Hyderabad | Kolkata | Mumbai | Pune

ALL RIGHT RESERVED
Reproduction or transmission in any form or by any means electronic or mechanical of this publication in part or whole is prohibited, including photocopy, recording or any other information storage and retrieval system, without prior permission from Dorset Industries Private Limited We reserve the right to make alteration to the model without prior notice . All sizes are finished as portrayed through photographs in this catalogue may vary from the actual product. Please check physical product before placing your order.